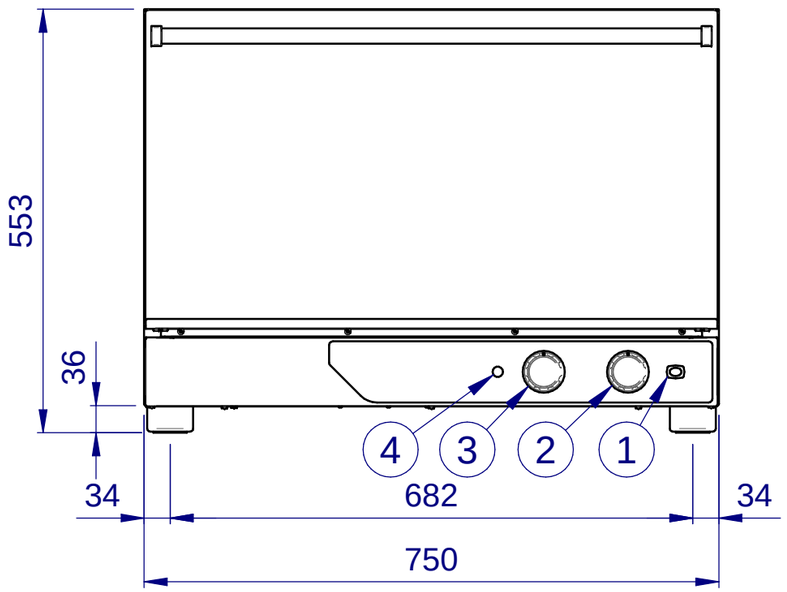

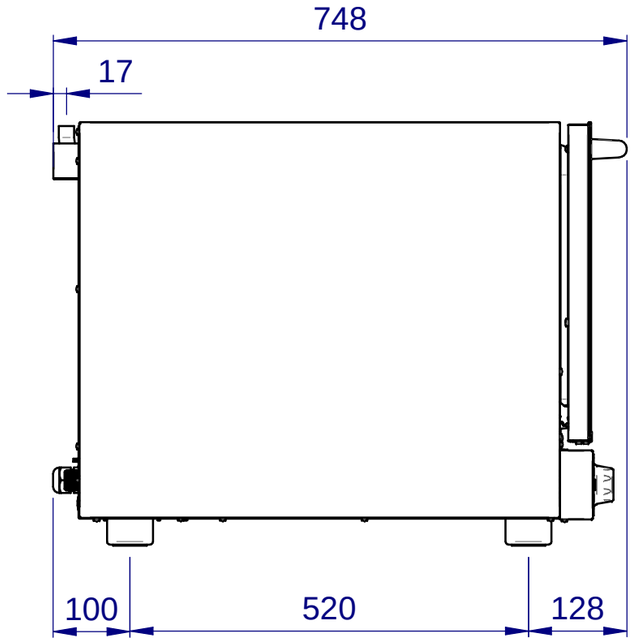

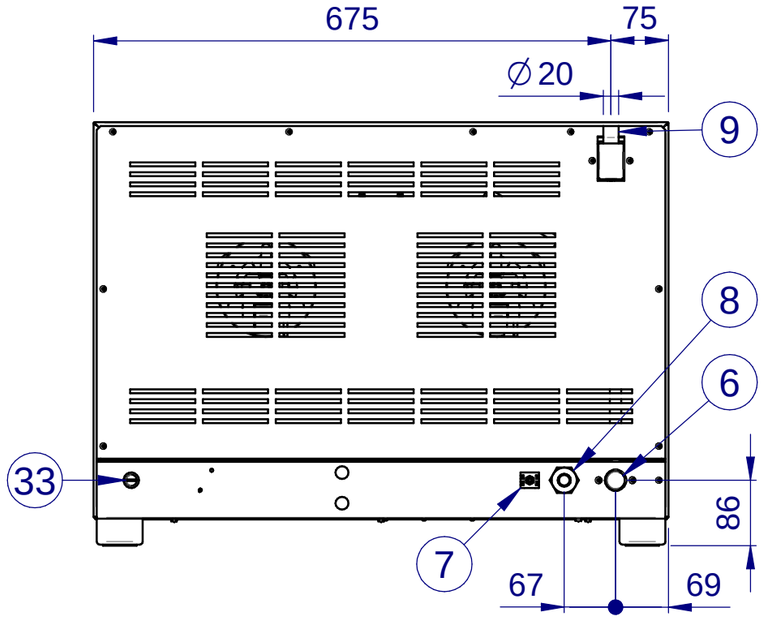

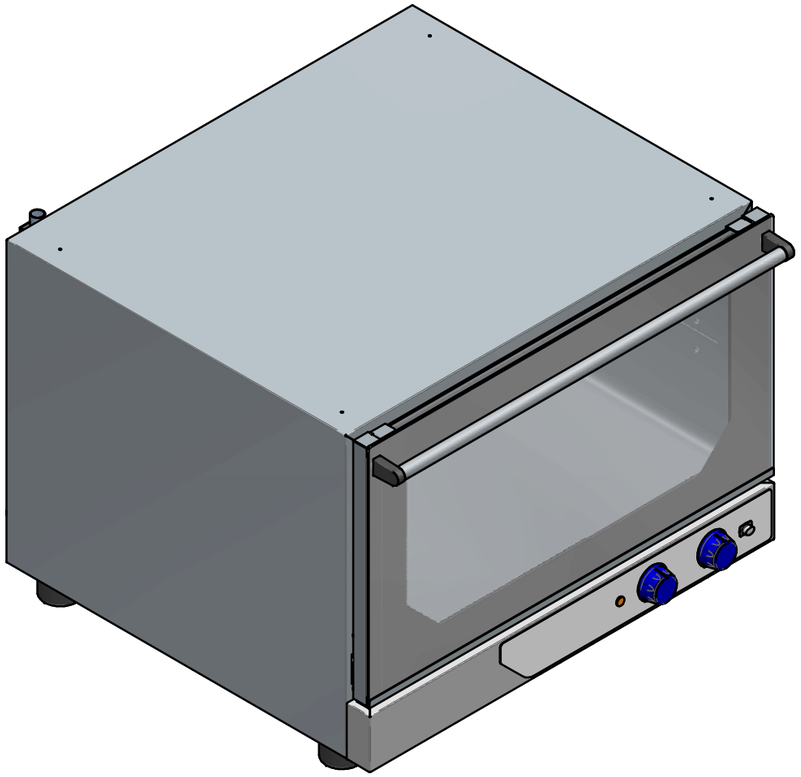

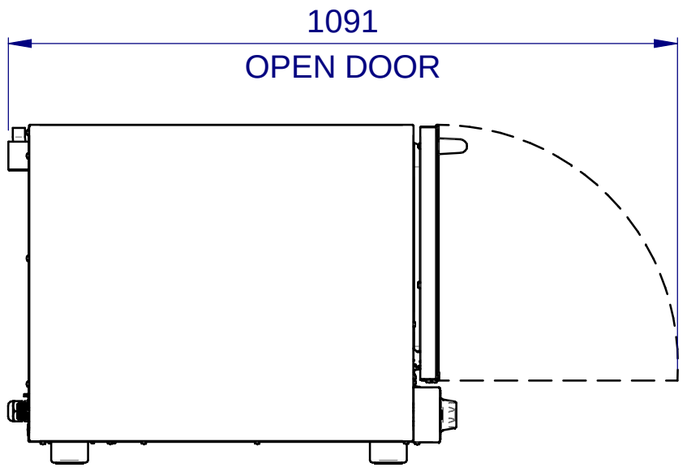

scale 1:10

Part nr.	Description
1	HUMIDIFICATION BUTTON
2	TIMER SELECTOR
3	TEMPERATURE SELECTOR
4	LIGHT ON/OFF HEATING ELEMENT
6	HUMIDIFY SOLENOID VALVE 3/4" BSP (GAS)
7	UNIPOTENTIAL TERMINAL
8	COMPRESSION CABLE GLAND
9	HOT FUMES EXHAYST CHIMNEY
33	SAFETY THERMOSTAT

Date					Released:	Description: TO46MHS, TO46MIHS
Revision No	1	2	3	4	20/11/2020	
Scale : 1:1	mm	A3	Drawing by: PREVEDELLO M.		Page No: Pag. 1 of 1	Code: **R52VIW00003**